CODE:	PF02325BC aa SN from 98E100
DESCRIPTION:	

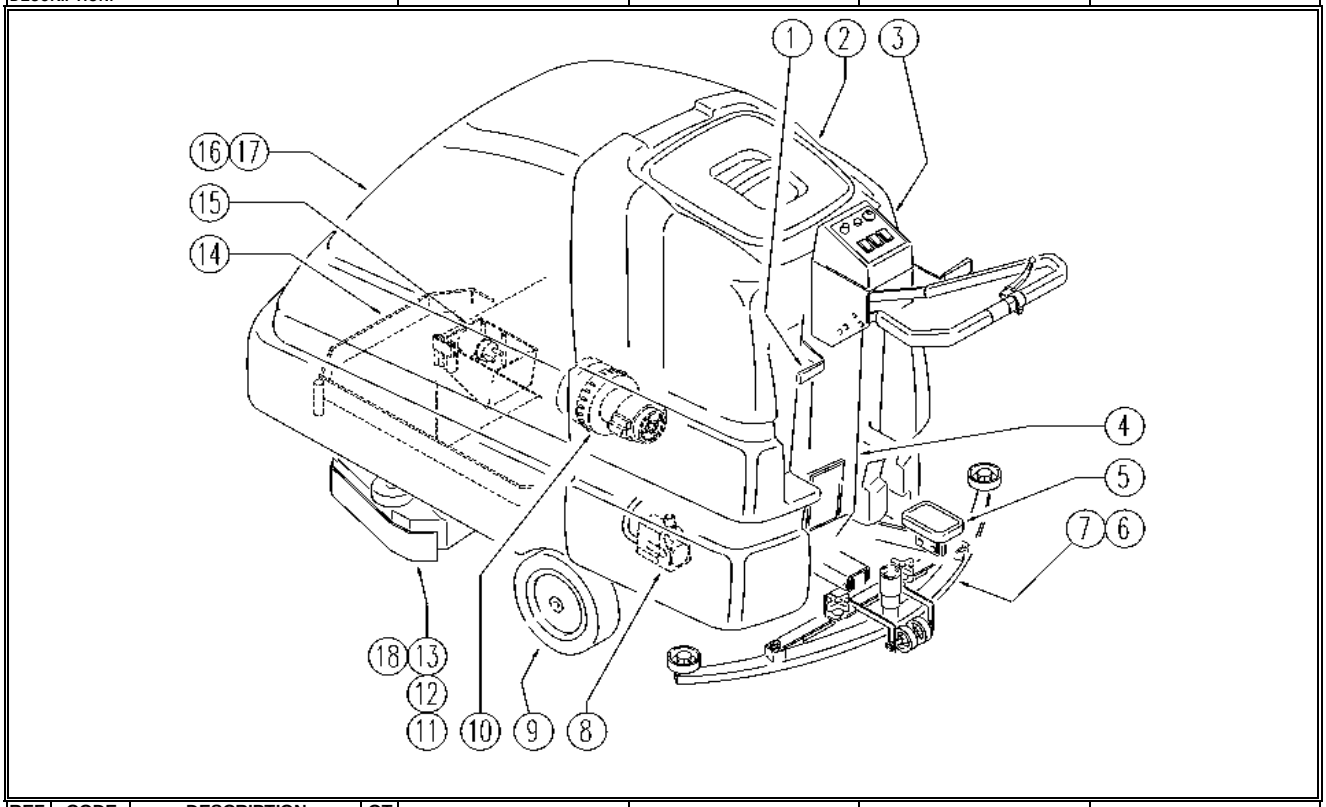

REF.	CODE	DESCRIPTION	QT
1	PL1098	SQUEEGEE LIFT	
2	PL1248	TANK	
3	PL1267	ELECTRIC UNIT 1	
4	PL1268	ELECTRIC UNIT 2	
5	PL1246F	HEAD LIFT	
6	PL1253	SQUEEGEE	
7	PL1099	SQUEEGEE SUPPORT	
8	PL1017	PUMP	
9	PL1273	DRIVE UNIT AND BRAKE	
10	PL1101	SUCTION	
11	PL1239	HEAD: AXLE PULLEY	
12	PL1265	HEAD: MOTOR	
13	PL1266	HEAD: FLAP AND BOX	
14	PL1272F	FRAME	
15	PL1269	ELECTRIC UNIT 3	
16	PL1157	HOOD LIFTING	
17	PL1280BC	EXTERNAL PARTS	
18	PL1254	BRUSHES	
	WD27185-1	ELEC. SCHEMATIC DIAGRAM	